5333
X-RAY INSPECTION

Explosives, Weapons and Contraband

AUTOCLEAR
SECURITY INSPECTION SYSTEMS

SINGLE SOURCE, MULTI-ENERGY

X-RAY INSPECTION

Shown with optional tunnel extensions.

Designed for screening mid-sized items for weapons, explosives, drugs and other contraband, the single-source, multi-energy 5333 X-ray inspection system is fast and easy to operate. Ideal for screening hand carried items such as purses, briefcases, backpacks, strollers, and small parcels and more, the compact of 5333 is a great choice for small and limited spaces. The system's low profile, bottom-up generator design makes fine lines appear much sharper and larger on-screen.

- Rapidly images full mailbags and long or tall items
- Fits in elevators, narrow halls and tight spaces
- Patented guided conveyor belt never needs adjusting
- Built on the industry's most stable and flexible operating system

APPLICATIONS:

- Passenger, Staff and Visitor Checkpoint Inspection
- Corporate, Government and Private Security
- Critical Infrastructure Security
- Mail Screening

5333 SPECIFICATIONS

X-RAY INSPECTION

PHYSICAL DETAILS

Tunnel Size:	53.0 x 33.0 cm 20.87 x 12.99 in (W x H)
Dimensions:	133.2 x 74 x 112.2cm 52.4 x 29.1 x 44.3 in. (L x W x H)
Weight:	305 kg (672 lbs.) uncrated 334 kg (737 lbs.) crated
Construction:	Robust heavy gauge, epoxy-painted, steel frame construction. Stainless steel and aluminum trim and accessories. Non-marking casters.
Temperature:	Operating: 0° to 40°C (32° to 104°F) Storage: -20° to 60°C (-4° to140°F)
Humidity:	20% to 95%, non-condensing
Power Consumption:	< 0.7 kV AC 100, 120, 200, 220, 240, 250 volts AC +10%; < 7 amps 100, 120 volts AC ± 10%; < 3.5 amps 200, 220, 240, 250 volt; all at 50 or 60 Hz

X-RAY GENERATOR

X-ray Tube Head:	Self-contained with sealed oil bath cooling
High Voltage Rating:	100 kV, operating at 90kV
Duty Cycle:	100%
Beam Orientation:	Diagonal (80° beam divergence)
Dose per Exam:	0.1 mR (1µSv)

INSPECTION CAPABILITIES

Material Penetration:	10 –11 mm (0.39–0.43 in.) steel with 100kV 28-29 mm (1.18 in.) steel with 160kV
Contrast Sensitivity:	Over 2 million color tones standard
Resolution:	38-40 AWG wire
Conveyor Speed:	24.0 cm (9.4 in.) per second 14.6 m (48 ft.) per minute
Pulling Weight:	150 kg (331 lbs)
Film Safety:	Guaranteed for high-speed film up to ISO1600 (33DIN)

DETECTORS

High-speed, ultra-sensitive photodiode detector array; L-shaped for 100% object screening

VIDEO

19" color LCD monitor, 1280 x 1024 video card

STANDARD FEATURES

- autoSoft (LINUX) operating system
- Full-size operator control panel (OCP) with touchpad navigation
- autoTracking guided conveyor belt system
- Reversible conveyor direction
- High/low density stripping
- Organic/inorganic stripping
- Color; reverse B/W imaging
- Interactive help screens
- Dark and light enhance
- D-SCAN
- Real Clear
- autoDense Alert
- autoOutline
- autoSensing
- autoScale
- autoCal
- autoImage recall (10 images)
- Z-SCAN
- Save screen to USB
- 128x Smart Zoom
- Adjustable zoom preview window

OPTIONS

- 160kV generator,operating at 140kV
- Loading or exit roller beds
- Tunnel extensions
- Conveyor extensions
- Loading or exit 18” parcel slide
- Tropical humidity kit
- DVD drive
- autoMatAlert
- autoZ display
- Image archiving
- Threat image projection (TIP)
- Built-in training
- Level 1, 2, and 3 networking
- User management
- STI Viewer software for archived image analysis
- Locking metal OCP cover
- Variable height OCP mount
- Dual and larger monitors
- Locking monitor garage
- Laser printer
- Console desk
- kV, mA meter
- Uninterruptible power supply
- Optical X-rayon/off sensor
- Footpad
- Item counter
- AutoShield Alert

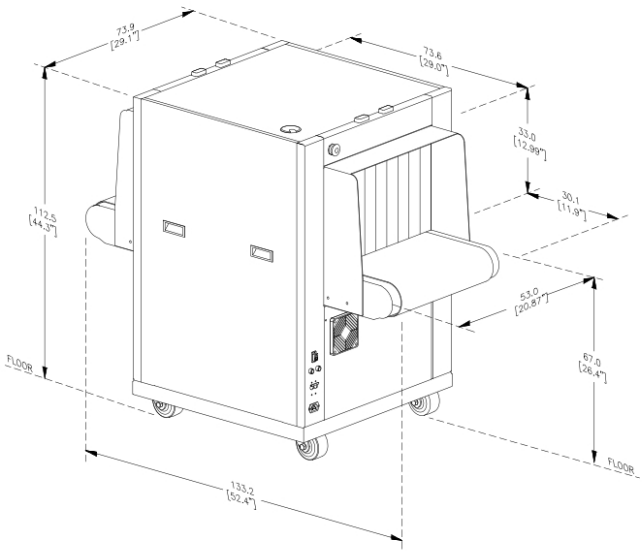

NOTE: Non-marking casters. Dimensions are in centimeters.

AUTOCLEAR
SECURITY INSPECTION SYSTEMS

World Headquarters

10A Bloomfield Avenue
Pine Brook, NJ 07058 USA

Tel. 1 973.276.6000
1 973.276.6161
Fax. 1 973.227.0832

www.autoclear.com

ISO 9001:2015 REGISTERED

© 2011-2015 Autoclear. CheckGate®, Control Screening®, Dynavision®, HandWand® and Scintrex® are among our many registered trademarks. All rights reserved. Autoclear reserves the right to update this information presented in thisdocumentatanytime,withoutnotice.